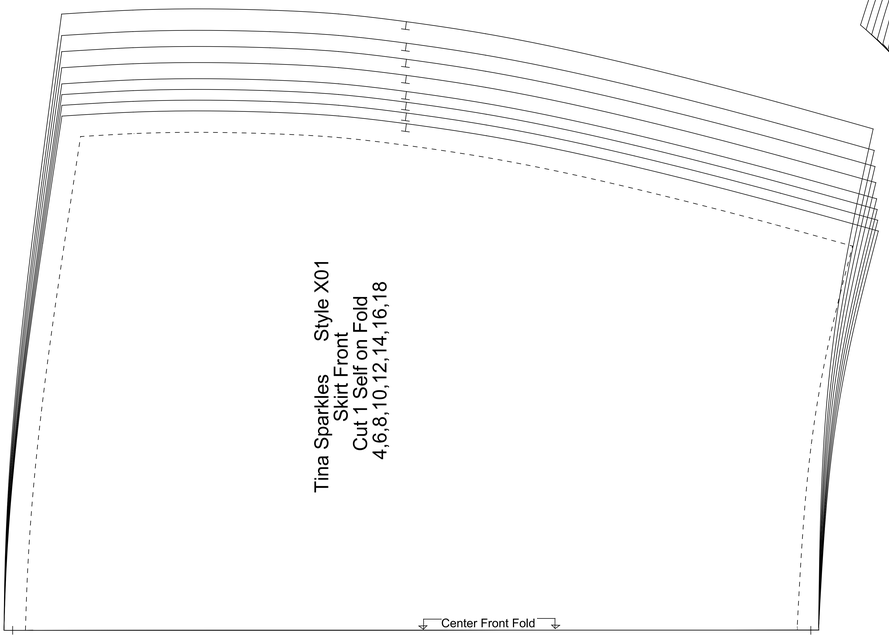
Tina Sparkles Style X01
Skirt Front
Cut 1 Self on Fold
4,6,8,10,12,14,16,18
Center Front Fold

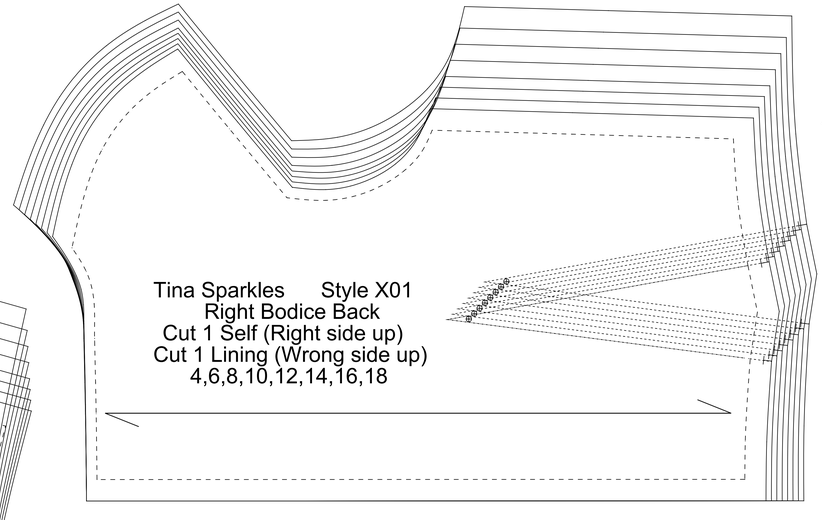
Tina Sparkles Style X01
Right Bodice Back
Cut 1 Self (Right side up)
Cut 1 Lining (Wrong side up)
4,6,8,10,12,14,16,18

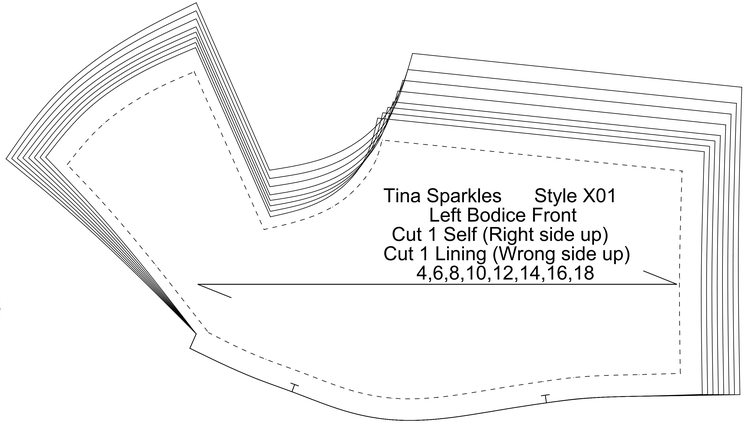
Tina Sparkles Style X01
Left Bodice Front
Cut 1 Self (Right side up)
Cut 1 Lining (Wrong side up)
4,6,8,10,12,14,16,18

Tina Sparkles Style X01
Skirt Back
Cut 2 Self
4,6,8,10,12,14,16,18

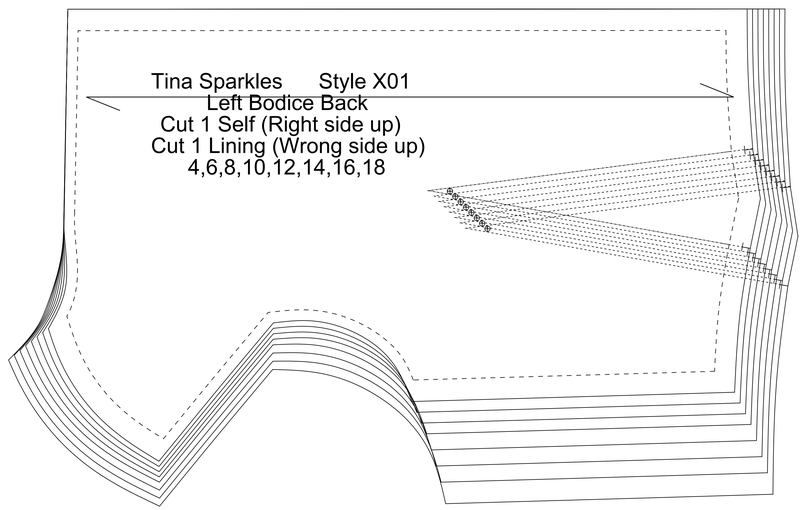
Tina Sparkles Style X01
Left Bodice Back
Cut 1 Self (Right side up)
Cut 1 Lining (Wrong side up)
4,6,8,10,12,14,16,18

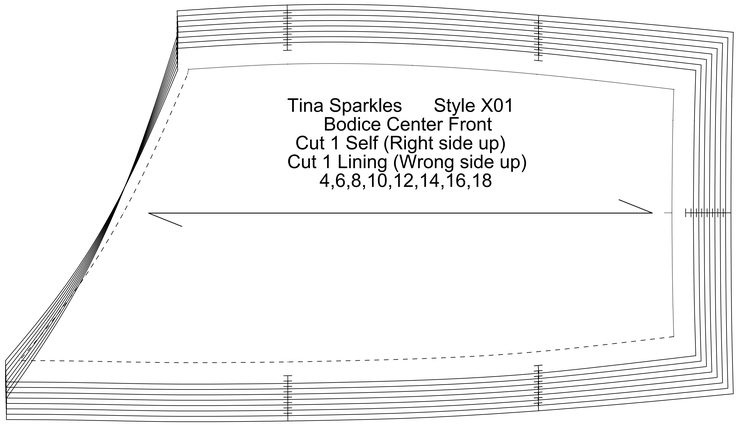
Tina Sparkles Style X01
Bodice Center Front
Cut 1 Self (Right side up)
Cut 1 Lining (Wrong side up)
4,6,8,10,12,14,16,18

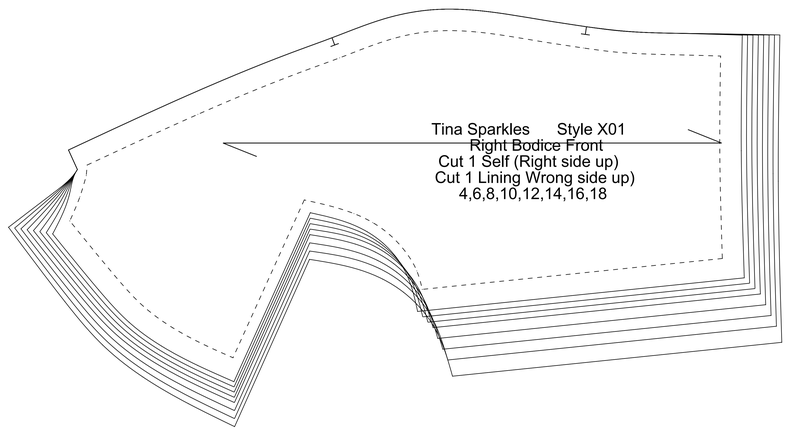
Tina Sparkles Style X01
Right Bodice Front
Cut 1 Self (Right side up)
Cut 1 Lining Wrong side up)
4,6,8,10,12,14,16,18

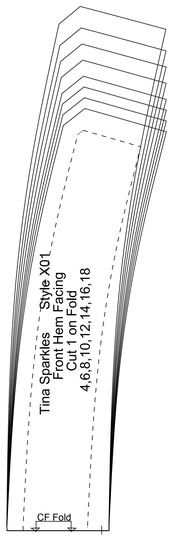
Tina Sparkles Style X01
Front Hem Facing
Cut 1 on Fold
4,6,8,10,12,14,16,18
CF Fold

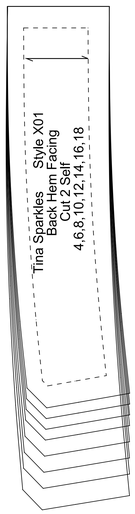
Tina Sparkles Style X01
Back Hem Facing
Cut 2 Self
4,6,8,10,12,14,16,18